DALLAS MILLWORK, Inc.

L. F. SCHMIDT LICENSE No. 43409 STATE OF FLORIDA PROFESSIONAL ENGINEER

Digitally signed by Lyndon F Schmidt
Date: 2026.07.02 08:40:23 -04'00'

This item has been digitally signed and sealed by **L. F. Schmidt, P.E.** on the date adjacent to the seal.

Printed copies of this document are not considered signed and sealed and the signature must be verified on any electronic copies.

THIS PRODUCT APPROVAL IS VALID ONLY FOR THE STATE OF FLORIDA

WOOD ENTRY DOOR SINGLE w/ or w/out SIDELITE(S)

INSWING / OUTSWING "NON-IMPACT"

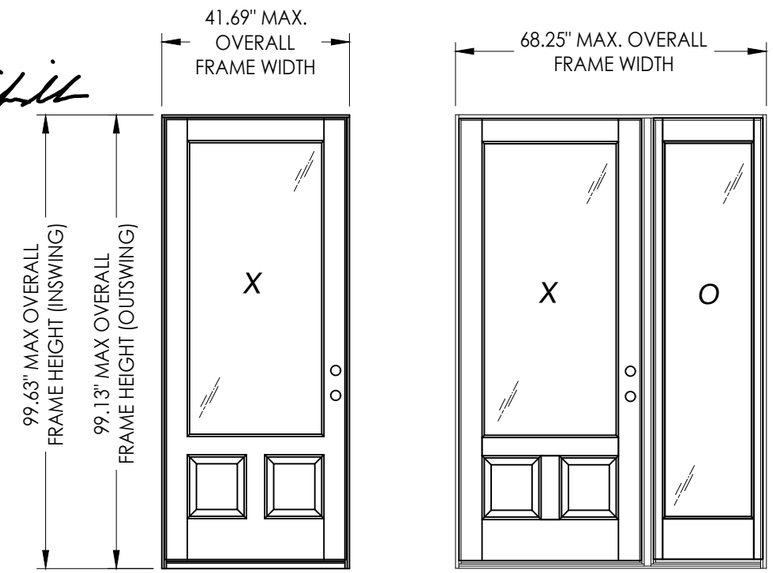

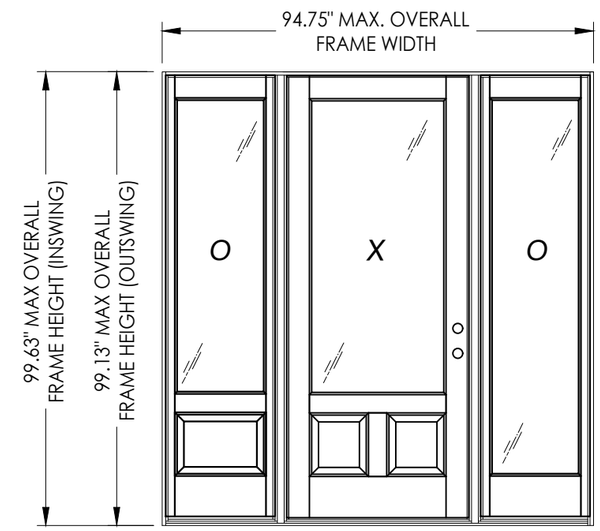

GENERAL NOTES

1. This product has been evaluated and is in compliance with the 9th Edition (2026) Florida Building Code (FBC) structural requirements excluding the "High Velocity Hurricane Zone" (HVHZ).
2. Product anchors shall be as listed and spaced as shown on details. Anchor embedment to base material shall be beyond wall dressing or stucco.
3. When used in areas requiring wind borne debris protection this product is required to be protected with an impact resistant covering that complies with FBC Sections 1609.1.2 & R301.2.1.2.
4. For 2x stud framing construction, anchoring of these units shall be the same as that shown for 2x buck masonry construction.
5. Site conditions that deviate from the details of this drawing require further engineering analysis by a licensed engineer or registered architect.

TABLE OF CONTENTS

SHEET#	DESCRIPTION
1	Typical elevations, design pressures & general notes
2	Door panel details
3	Sidelite panel details
4	Elevations
5	Horizontal cross sections
6	Vertical cross sections
7	Buck anchoring
8	Frame anchoring
9	Bill of materials and components

CONFIGURATION	MAX. FRAME DIMENSION	DESIGN PRESSURE (PSF) INSWING		DESIGN PRESSURE (PSF) OUTSWING		LOCK HARDWARE
		POSITIVE	NEGATIVE	POSITIVE	NEGATIVE	
X	41.69" x 99.63"	+55.0	-60.0	+55.0	-55.0	Schlage Knob & Deadbolt plus Amesbury Tru-Lock Bolt System
XO / OX	68.25" x 99.63"	+55.0	-60.0	+55.0	-55.0	
OXO	94.75" x 99.63"	+55.0	-60.0	+55.0	-55.0	

Documents Prepared By:
Lyndon F. Schmidt
P.E. No. 43409
RW BUILDING CONSULTANTS, INC.
P.O. Box 230, Valrico, FL 33595
Phone No.: 813.659.9197
FBPE Registry No. 9813

PRODUCT: DALLAS MILLWORK WOOD DOOR

PART OR ASSEMBLY: TYPICAL ELEVATIONS, DESIGN PRESSURES & GENERAL NOTES

NO.	DATE	REVISIONS	BY
5	7/2/26	UPDATE TO 9TH ED. (2026) FBC	LFS
4	10/5/23	UPDATE TO 8TH ED. (2023) FBC	LFS
3	8/07/20	UPDATE TO 7TH ED. (2020) FBC	LFS
2	7/10/17	UPDATE TO 6TH ED. (2017) FBC	JK
1	7/2/15	UPDATE TO 5TH ED. (2014) FBC	JK

DATE: 1/29/13
SCALE: N.T.S.
DWG. BY: JK
CHK. BY: LFS
DRAWING NO.: FL-16185.3
SHEET 1 OF 9

© 2013 R.W. BUILDING CONSULTANTS INC.

Z:\2023 FBC Drawings\Dallas Millwork, Inc\FL-16185 R6 NI Wood Doors\FL-16185.3-.4.dwg

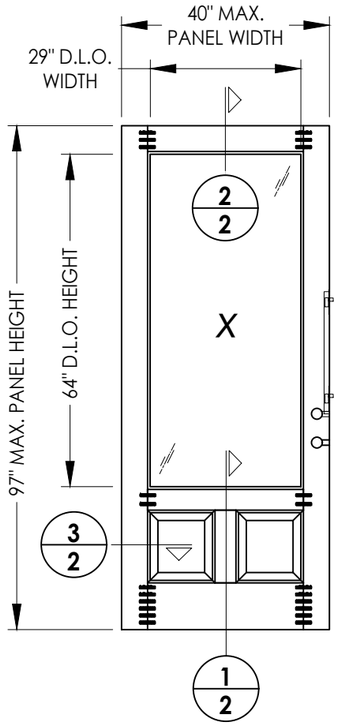

40 WOOD DOOR
3/4 Lite

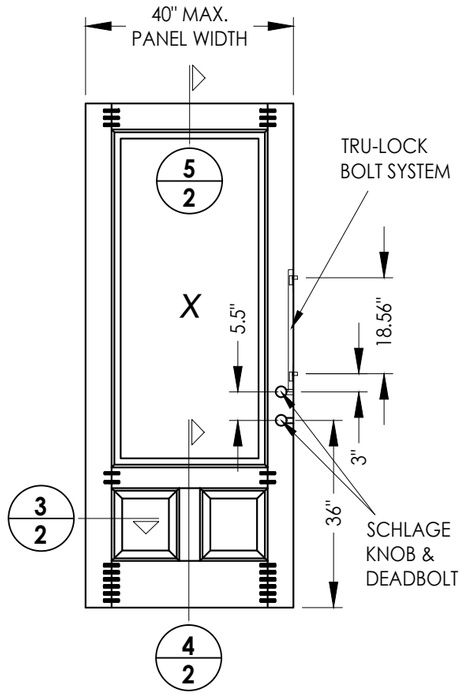

41 WOOD DOOR
Opaque

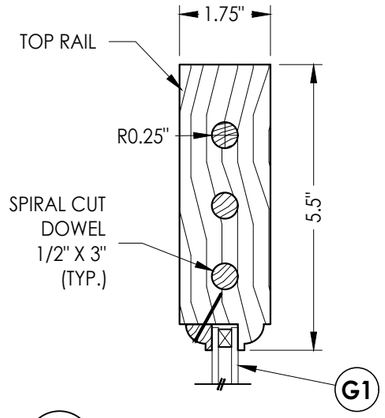

2/2 VERTICAL CROSS SECTION

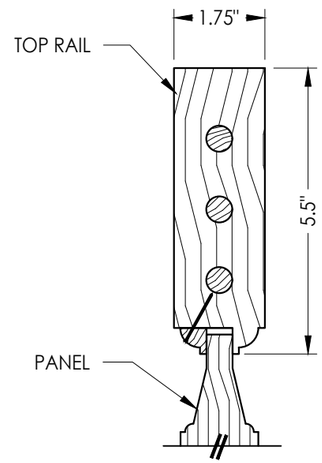

5/2 VERTICAL CROSS SECTION

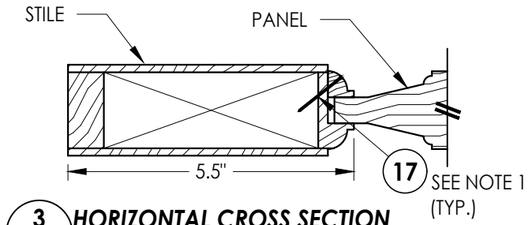

3/2 HORIZONTAL CROSS SECTION

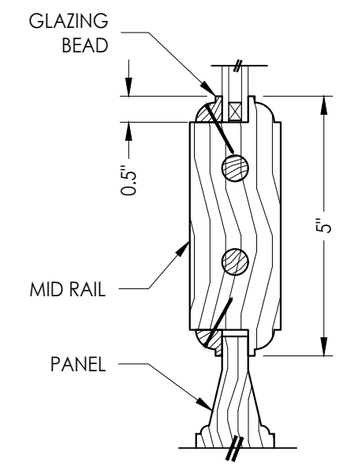

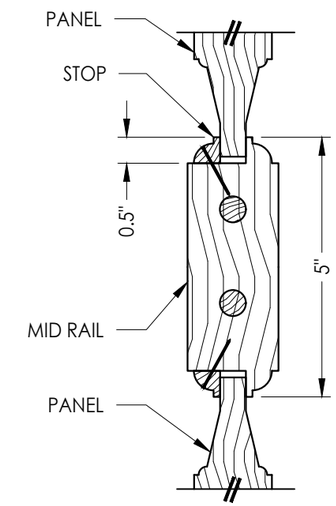

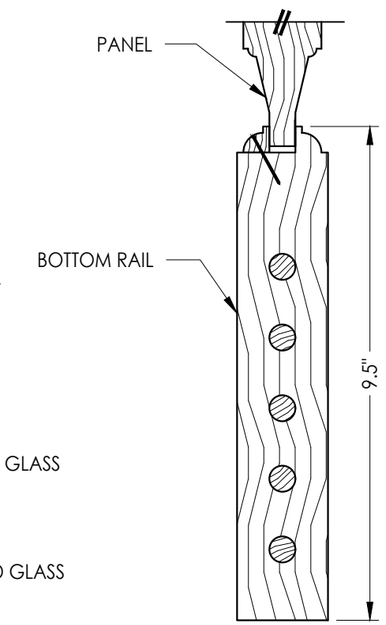

1/2 VERTICAL CROSS SECTION

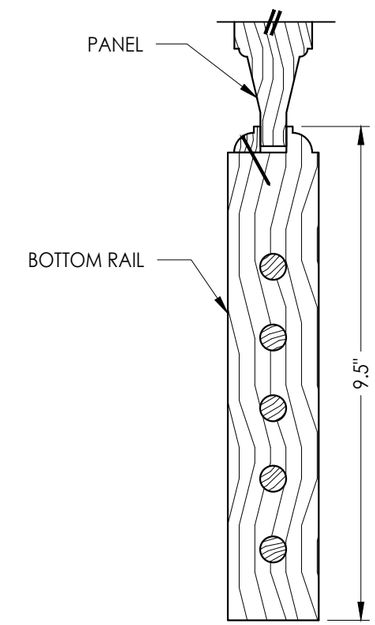

4/2 VERTICAL CROSS SECTION

HARDWARE CHART	
MANUFACTURER	MODEL
SCHLAGE	KNOB: "F" SERIES DEADBOLT: B60/62
AMESBURY	TRU-LOCK BOLT SYSTEM: 3205 SERIES

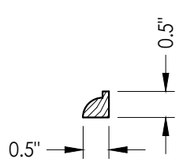

GLAZING BEAD/ STOP

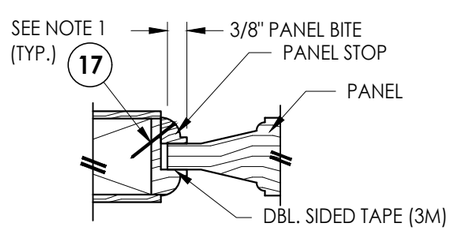

PANEL INFIL DETAIL

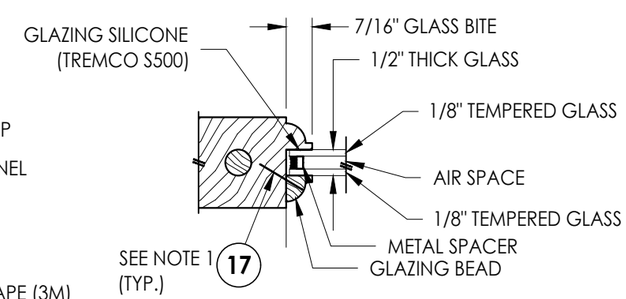

G1 GLAZING DETAIL

NOTES :
1. Spaced 1" from ends and 5.25" O.C.
2. Door height may be reduced as long as hinge centerline distances (35") are not exceeded.

Documents Prepared By:
Lyndon F. Schmidt
P.E. No. 43409
RW BUILDING CONSULTANTS, INC.
P.O. Box 230, Valrico, FL 33595
Phone No.: 813.659.9197
FBPE Registry No. 9813

PRODUCT: DALLAS MILLWORK WOOD DOOR

PART OR ASSEMBLY: DOOR PANEL DETAILS

NO.	DATE	REVISIONS	BY
5	7/2/26	UPDATE TO 9TH ED. (2026) FBC	LFS
4	10/5/23	UPDATE TO 8TH ED. (2023) FBC	LFS
3	8/07/20	UPDATE TO 7TH ED. (2020) FBC	LFS
2	7/10/17	UPDATE TO 6TH ED. (2017) FBC	JK
1	7/2/15	UPDATE TO 5TH ED. (2014) FBC	JK

DATE: 1/29/13
SCALE: N.T.S.
DWG. BY: JK
CHK. BY: LFS
DRAWING NO.: FL-16185.3
SHEET 2 OF 9

© 2013 R.W. BUILDING CONSULTANTS INC.

Z:\2023 FBC Drawings\Dallas Millwork, Inc\FL-16185 R6 NI Wood Doors\FL-16185.3-.4.dwg

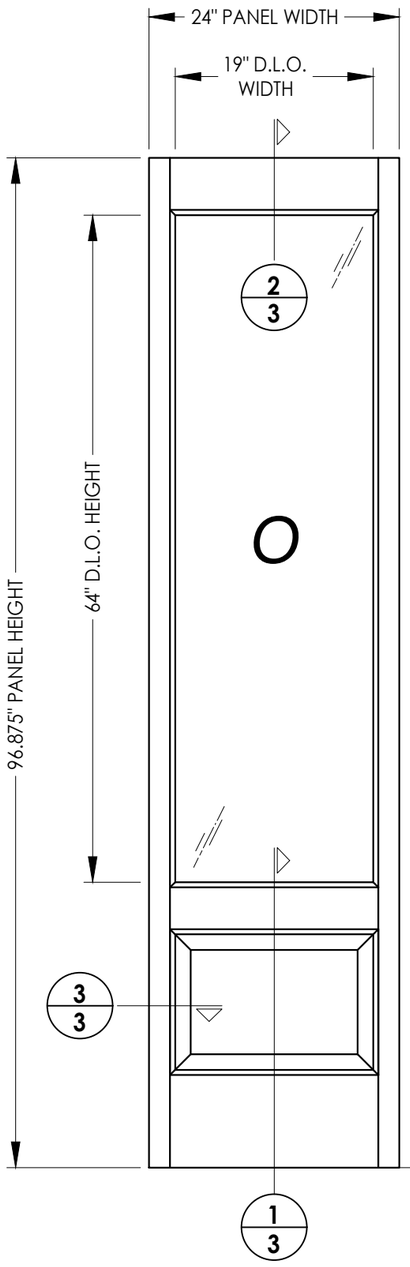

50 ***WOOD SIDELITE***
3/4 Lite

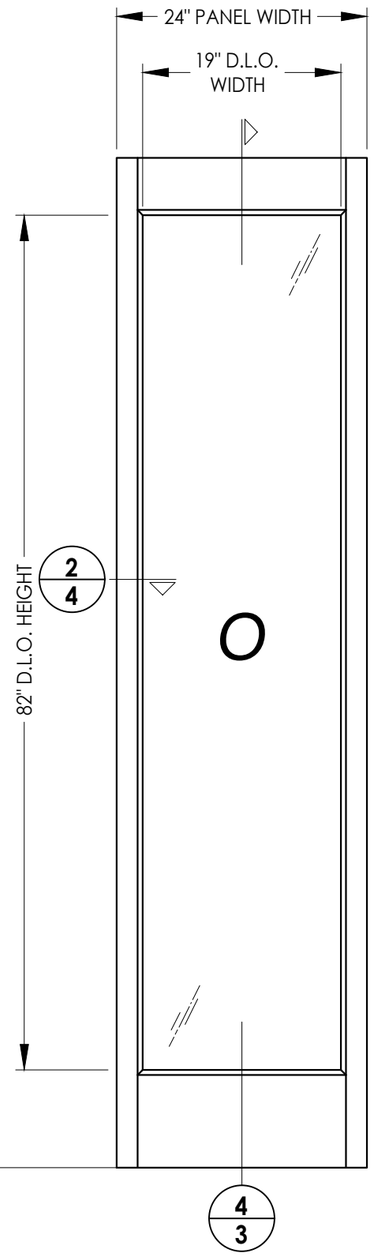

51 ***WOOD SIDELITE***
Full Lite

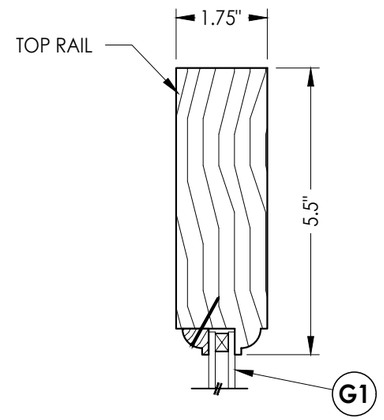

2/3 ***VERTICAL CROSS SECTION***

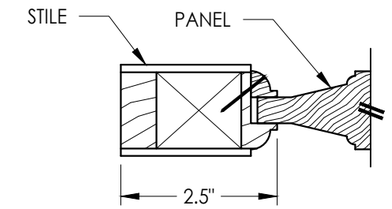

3/3 ***HORIZONTAL CROSS SECTION***

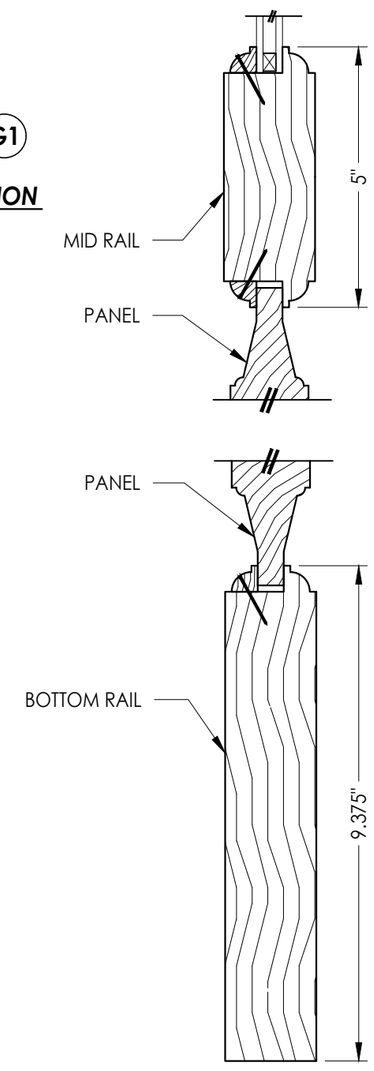

1/3 ***VERTICAL CROSS SECTION***

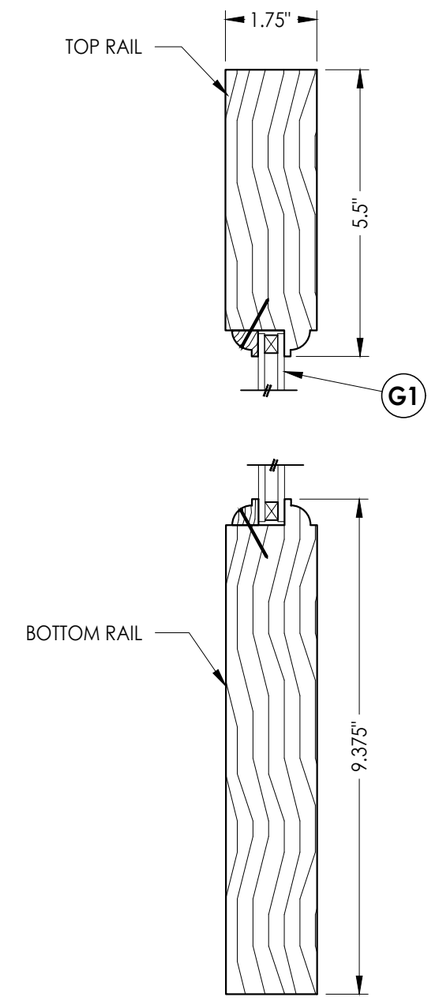

4/3 ***VERTICAL CROSS SECTION***

NOTE:
1. Sidelite stiles are connected to each rail as follows:
   Top & Mid Rails: (2) #9 x 3" Grip Rite screws each
   Bottom Rail: (3) #9 x 3" Grip Rite screws each

Documents Prepared By:
Lyndon F. Schmidt
P.E. No. 43409

RW BUILDING CONSULTANTS, INC.
P.O. Box 230, Valrico, FL 33595
Phone No.: 813.659.9197
FBPE Registry No. 9813

PRODUCT: *DALLAS MILLWORK WOOD DOOR*

PART OR ASSEMBLY: *SIDELITE PANEL DETAILS*

NO.	DATE	REVISIONS	BY
5	7/2/26	UPDATE TO 9TH ED. (2026) FBC	LFS
4	10/5/23	UPDATE TO 8TH ED. (2023) FBC	LFS
3	8/07/20	UPDATE TO 7TH ED. (2020) FBC	LFS
2	7/10/17	UPDATE TO 6TH ED. (2017) FBC	JK
1	7/2/15	UPDATE TO 5TH ED. (2014) FBC	JK

DATE: 1/29/13
SCALE: N.T.S.
DWG. BY: JK
CHK. BY: LFS
DRAWING NO.: FL-16185.3
SHEET 3 OF 9

© 2013 R.W. BUILDING CONSULTANTS INC.

Z:\2023 FBC Drawings\Dallas Millwork, Inc\FL-16185 R6 NI Wood Doors\FL-16185.3-.4.dwg

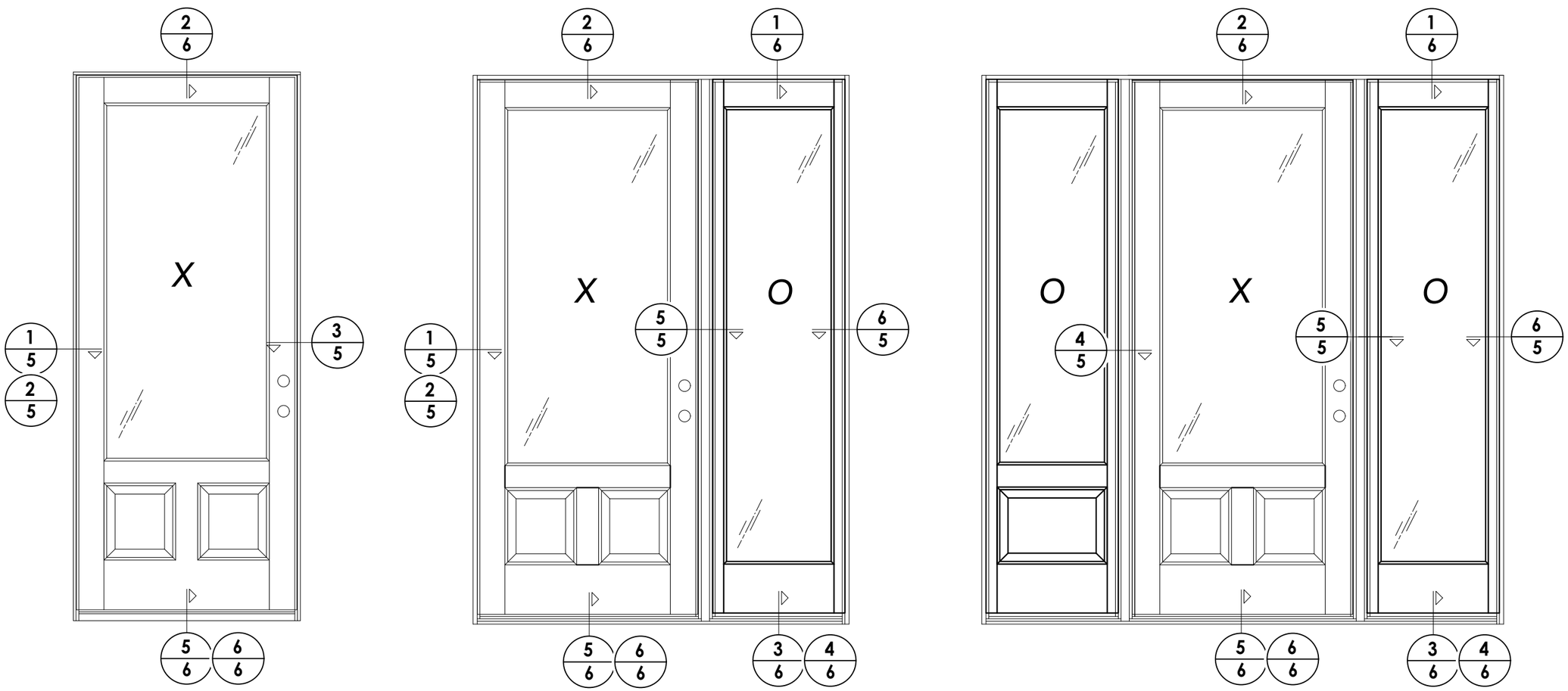

Documents Prepared By:
Lyndon F. Schmidt
P.E. No. 43409

RW BUILDING CONSULTANTS, INC.
P.O. Box 230, Valrico, FL 33595
Phone No.: 813.659.9197
FBPE Registry No. 9813

PRODUCT: DALLAS MILLWORK WOOD DOOR

PART OR ASSEMBLY: ELEVATIONS

REVISIONS

NO.	DATE		BY
5	7/2/26	UPDATE TO 9TH ED. (2026) FBC	LFS
4	10/5/23	UPDATE TO 8TH ED. (2023) FBC	LFS
3	8/07/20	UPDATE TO 7TH ED. (2020) FBC	LFS
2	7/10/17	UPDATE TO 6TH ED. (2017) FBC	JK
1	7/2/15	UPDATE TO 5TH ED. (2014) FBC	JK

DATE: 1/29/13
SCALE: N.T.S.
DWG. BY: JK
CHK. BY: LFS
DRAWING NO.: FL-16185.3
SHEET 4 OF 9

© 2013 R.W. BUILDING CONSULTANTS INC.

Z:\2023 FBC Drawings\Dallas Millwork, Inc\FL-16185 R6 NI Wood Doors\FL-16185.3-4.dwg

NOTE:
1. Install 6" from each end plus 5 more equally spaced (7 total).

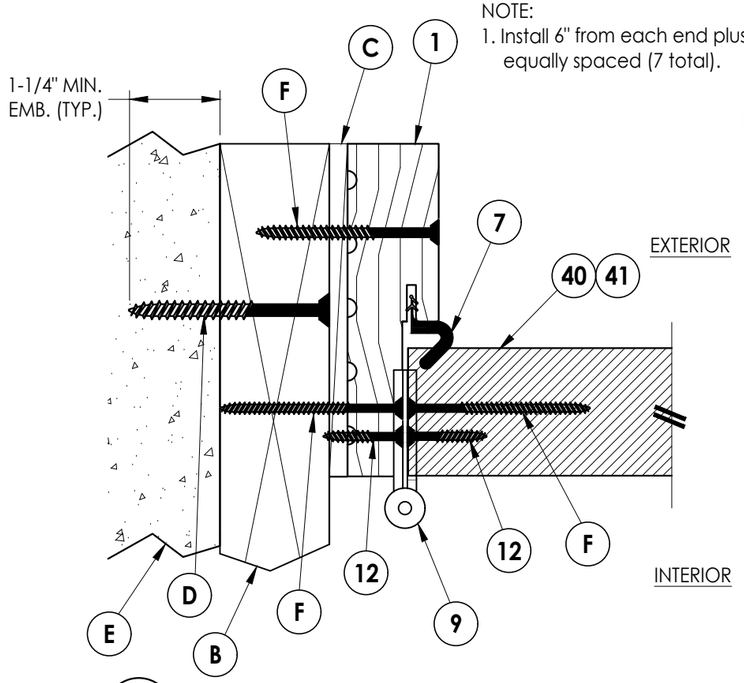

1/5 HORIZONTAL CROSS SECTION
Inswing shown - outswing also approved

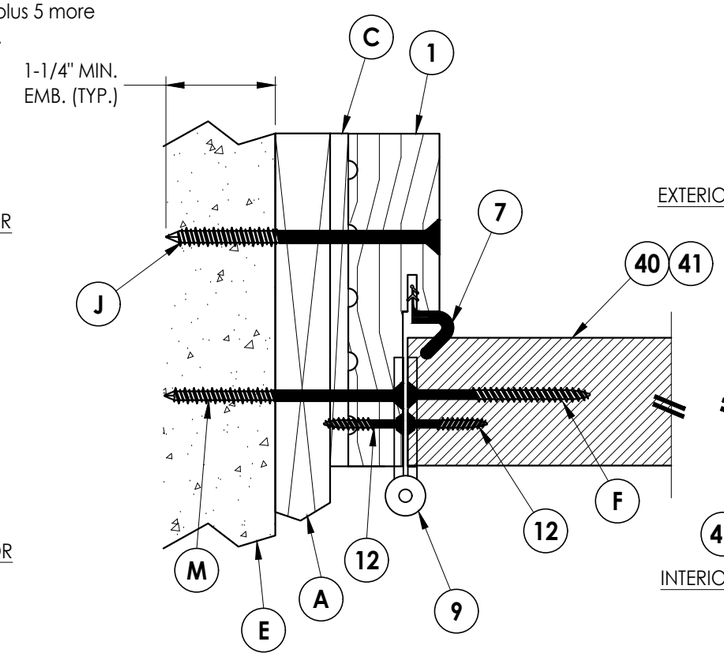

2/5 HORIZONTAL CROSS SECTION
Shown w/ 1X sub-buck

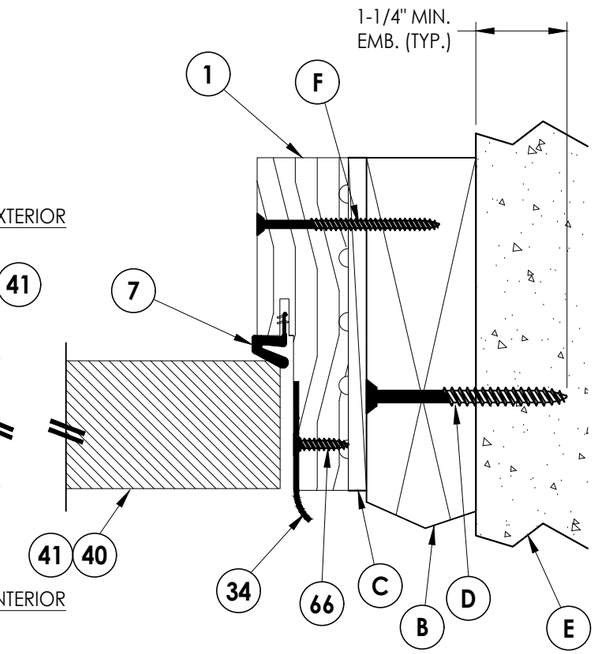

3/5 HORIZONTAL CROSS SECTION
Inswing shown - outswing also approved

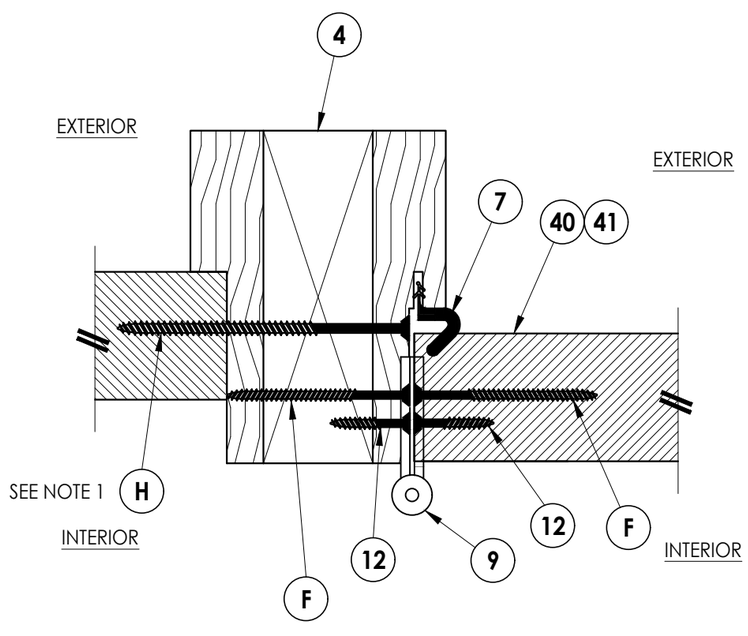

4/5 HORIZONTAL CROSS SECTION
Inswing shown - outswing also approved

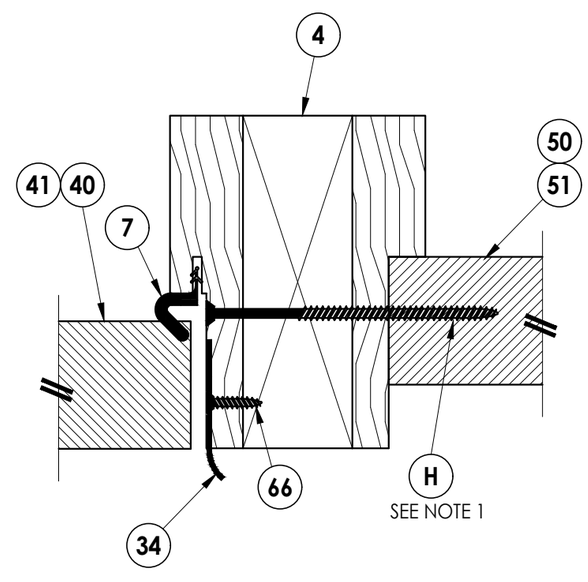

5/5 HORIZONTAL CROSS SECTION
Inswing shown - outswing also approved

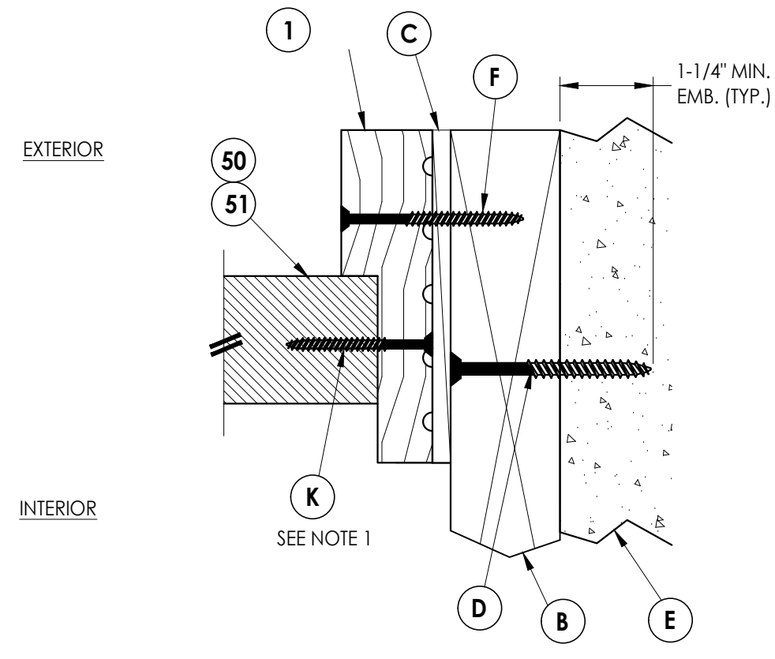

6/5 HORIZONTAL CROSS SECTION
Inswing shown - outswing also approved

Documents Prepared By:
Lyndon F. Schmidt
P.E. No. 43409

RW BUILDING CONSULTANTS, INC.
P.O. Box 230, Valrico, FL 33595
Phone No.: 813.659.9197
FBPE Registry No. 9813

PRODUCT: DALLAS MILLWORK WOOD DOOR

PART OR ASSEMBLY: HORIZONTAL CROSS SECTIONS

NO.	DATE	REVISIONS	BY
5	7/2/26	UPDATE TO 9TH ED. (2026) FBC	LFS
4	10/5/23	UPDATE TO 8TH ED. (2023) FBC	LFS
3	8/07/20	UPDATE TO 7TH ED. (2020) FBC	LFS
2	7/10/17	UPDATE TO 6TH ED. (2017) FBC	JK
1	7/2/15	UPDATE TO 5TH ED. (2014) FBC	JK

DATE: 1/29/13
SCALE: N.T.S.
DWG. BY: JK
CHK. BY: LFS
DRAWING NO.: FL-16185.3
SHEET 5 OF 9

© 2013 R.W. Building Consultants Inc.

Z:\2023 FBC Drawings\Dallas Millwork, Inc\FL-16185 R6 NI Wood Doors\FL-16185.3-.4.dwg

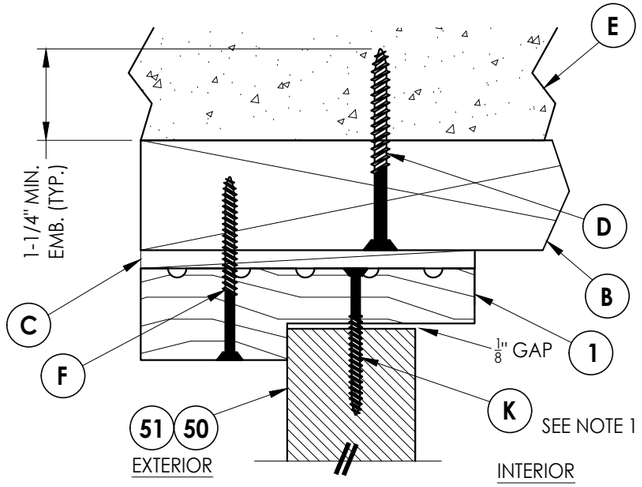

1/6 VERTICAL CROSS SECTION
Inswing shown - outswing also approved

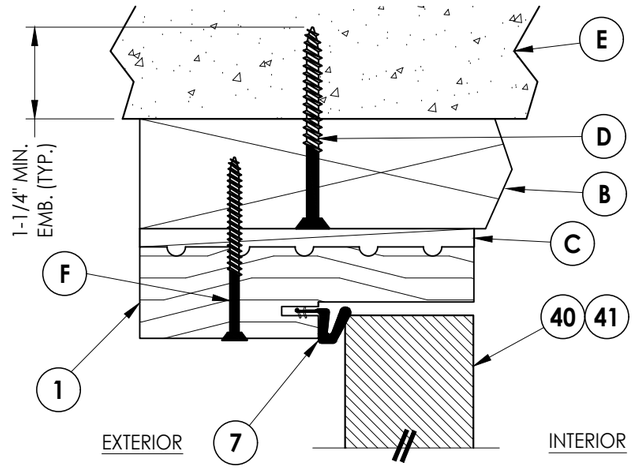

2/6 VERTICAL CROSS SECTION
Inswing shown - outswing also approved

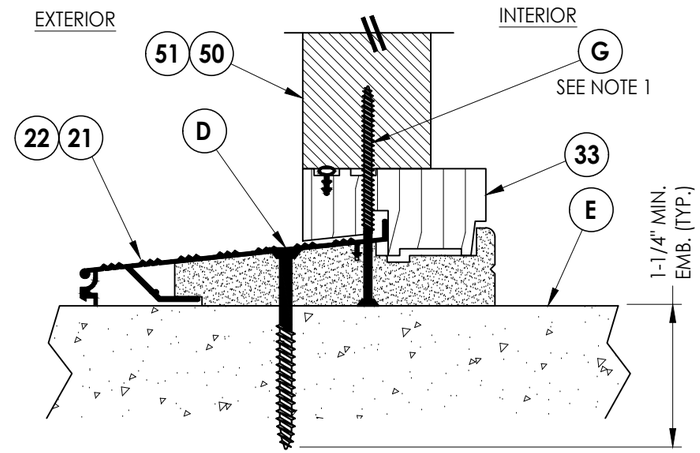

3/6 VERTICAL CROSS SECTION
Outswing shown

NOTE:
1. Center over sidelite at 10" O.C. (2 total).

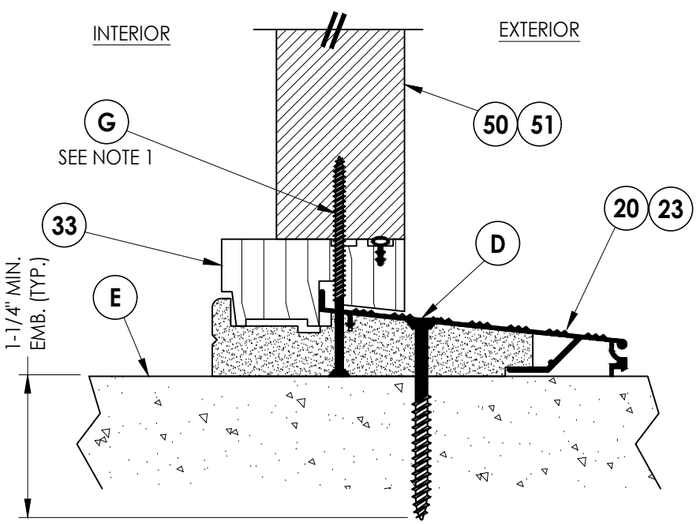

4/6 VERTICAL CROSS SECTION
Inswing shown

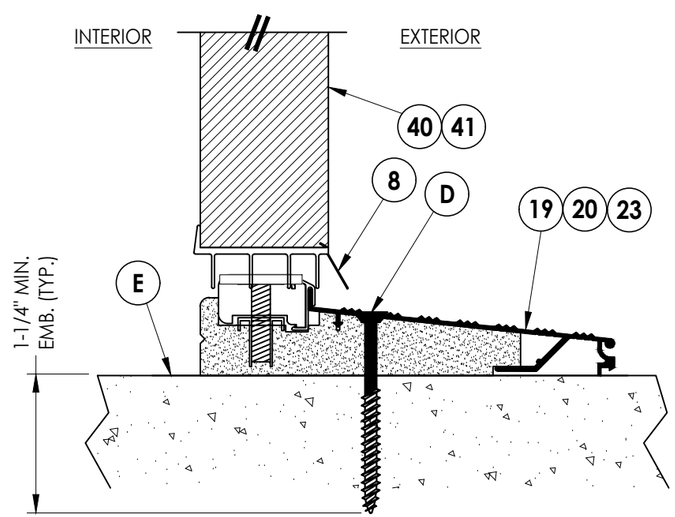

5/6 VERTICAL CROSS SECTION
Inswing shown

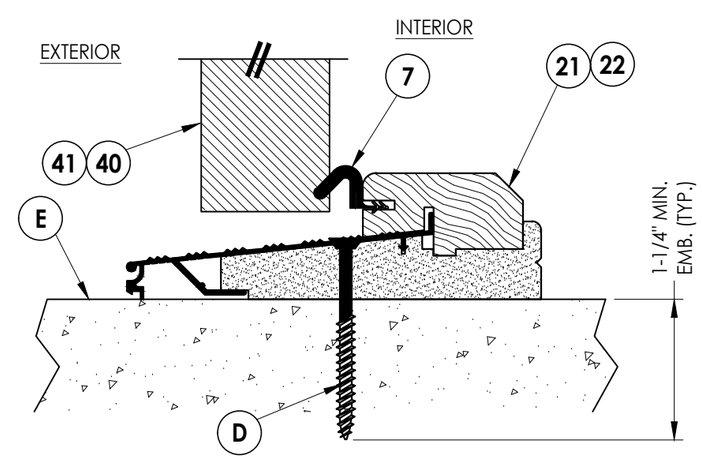

6/6 VERTICAL CROSS SECTION
Outswing shown

Documents Prepared By:
Lyndon F. Schmidt
P.E. No. 43409

RW BUILDING CONSULTANTS, INC.
P.O. Box 230, Valrico, FL 33595
Phone No.: 813.659.9197
FBPE Registry No. 9813

PRODUCT: DALLAS MILLWORK WOOD DOOR

PART OR ASSEMBLY: VERTICAL CROSS SECTIONS

REVISIONS

NO.	DATE		BY
5	7/2/26	UPDATE TO 9TH ED. (2026) FBC	LFS
4	10/5/23	UPDATE TO 8TH ED. (2023) FBC	LFS
3	8/07/20	UPDATE TO 7TH ED. (2020) FBC	LFS
2	7/10/17	UPDATE TO 6TH ED. (2017) FBC	JK
1	7/2/15	UPDATE TO 5TH ED. (2014) FBC	JK

DATE: 1/29/13
SCALE: N.T.S.
DWG. BY: JK
CHK. BY: LFS
DRAWING NO.: FL-16185.3
SHEET 6 OF 9

© 2013 R.W. Building Consultants Inc.

Z:\2023 FBC Drawings\Dallas Millwork, Inc\FL-16185 R6 NI Wood Doors\FL-16185.3-.4.dwg

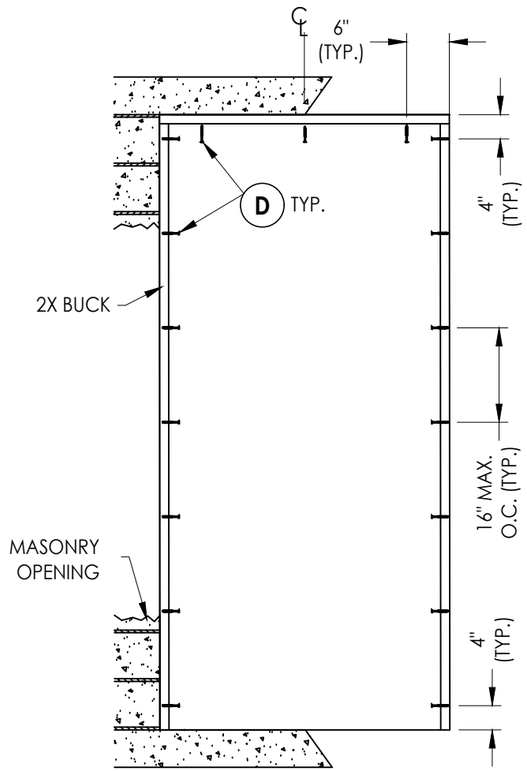

BUCK ANCHORING
X

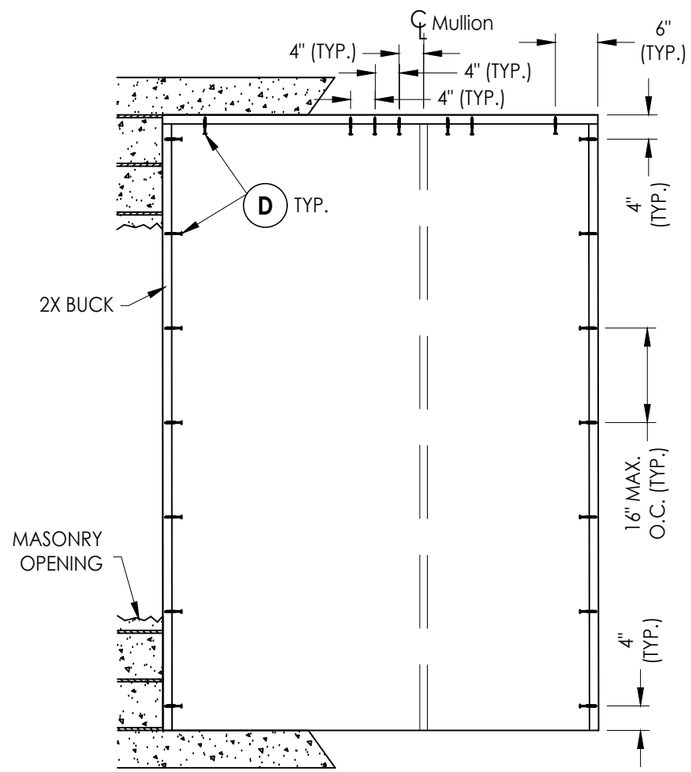

BUCK ANCHORING
XO / OX

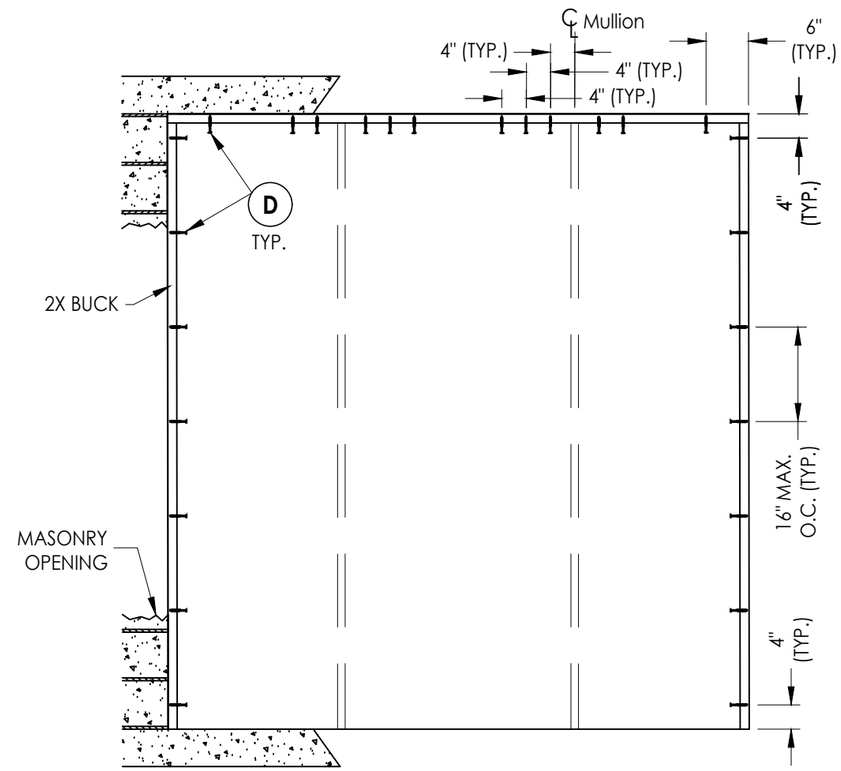

BUCK ANCHORING
OXO

CONCRETE ANCHOR NOTES:

1. *Concrete anchor locations at the corners may be adjusted to maintain the min. edge distance to mortar joints.*
2. *Concrete anchor locations noted as "MAX. ON CENTER" must be adjusted to maintain the min. edge distance to mortar joints, additional concrete anchors may be required to ensure the "MAX. ON CENTER" dimension are not exceeded.*
3. *Concrete anchor table:*

ANCHOR TYPE	ANCHOR SIZE	MIN. EMBEDMENT	MIN. CLEARANCE TO MASONRY EDGE	MIN. CLEARANCE TO ADJACENT ANCHOR
ITW TAPCON®	1/4"	1-1/4"	2"	4"
DeWALT ULTRACON+®	1/4"	1-1/4"	1"	4"

Documents Prepared By:
Lyndon F. Schmidt
P.E. No. 43409

RW BUILDING CONSULTANTS, INC.
P.O. Box 230, Valrico, FL 33595
Phone No.: 813.659.9197
FBPE Registry No. 9813

PRODUCT: *DALLAS MILLWORK WOOD DOOR*

PART OR ASSEMBLY: *BUCK ANCHORING*

REVISIONS

NO.	DATE		BY
5	7/2/26	UPDATE TO 9TH ED. (2026) FBC	LFS
4	10/5/23	UPDATE TO 8TH ED. (2023) FBC	LFS
3	8/07/20	UPDATE TO 7TH ED. (2020) FBC	LFS
2	7/10/17	UPDATE TO 6TH ED. (2017) FBC	JK
1	7/2/15	UPDATE TO 5TH ED. (2014) FBC	JK

DATE: 1/29/13
SCALE: N.T.S.
DWG. BY: JK
CHK. BY: LFS
DRAWING NO.: FL-16185.3
SHEET 7 OF 9

© 2013 R.W. Building Consultants Inc.

Z:\2023 FBC Drawings\Dallas Millwork, Inc\FL-16185 R6 NI Wood Doors\FL-16185.3-.4.dwg

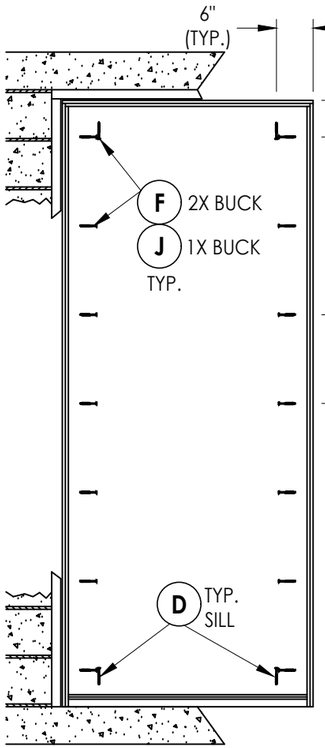

FRAME ANCHORING
X

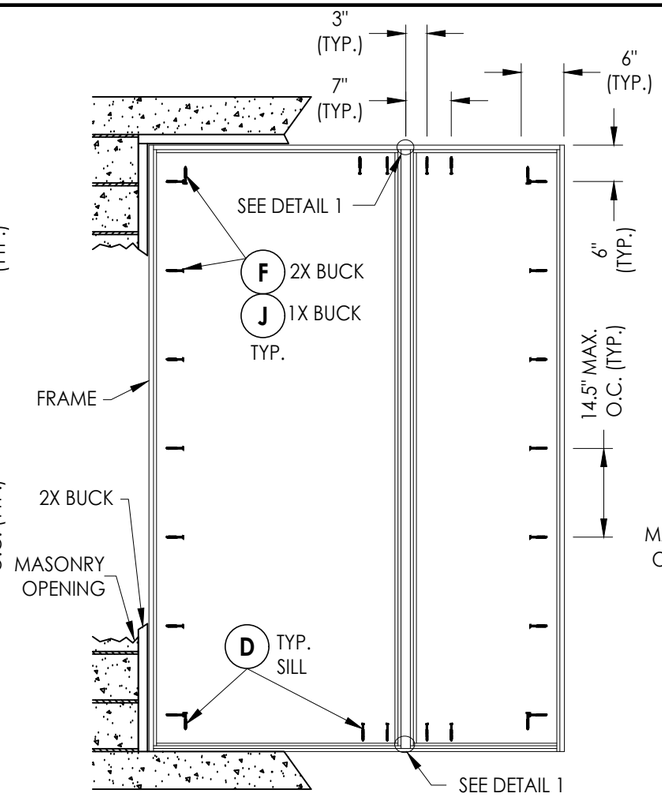

FRAME ANCHORING
XO / OX

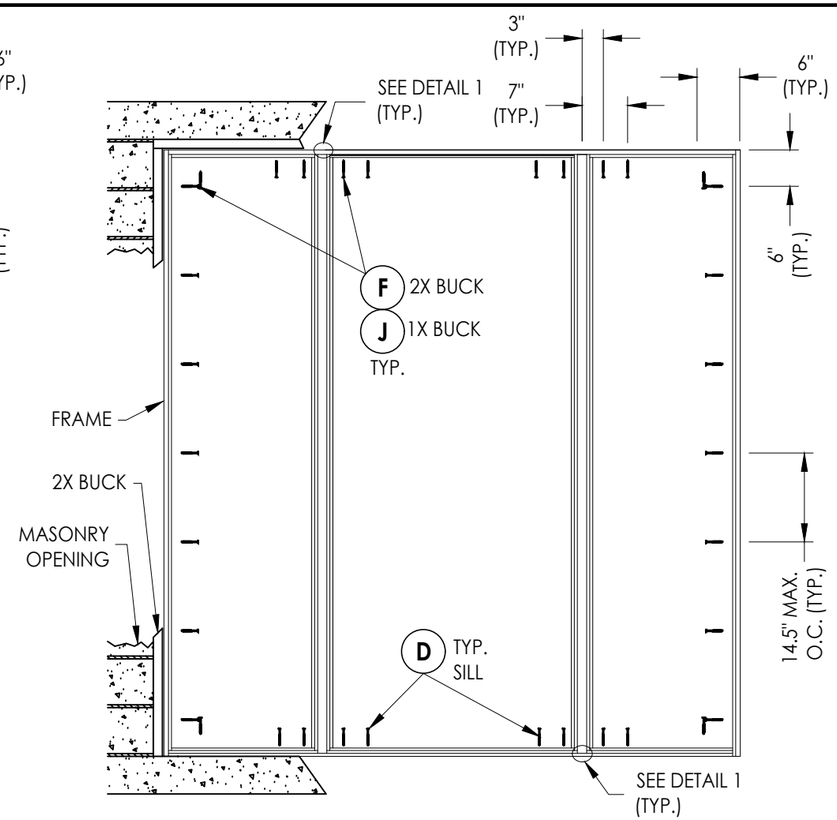

FRAME ANCHORING
OXO

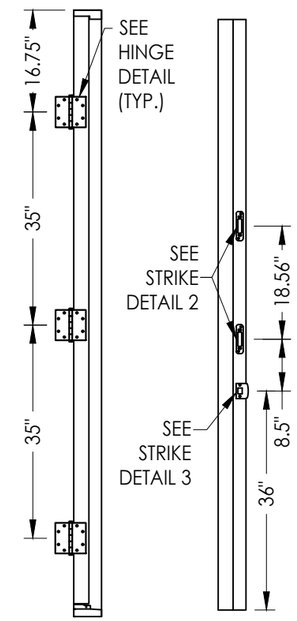

HINGE JAMB **STRIKE JAMB**

CONCRETE ANCHOR NOTES:

1. *Concrete anchor locations at the corners may be adjusted to maintain the min. edge distance to mortar joints.*
2. *Concrete anchor locations noted as "MAX. ON CENTER" must be adjusted to maintain the min. edge distance to mortar joints, additional concrete anchors may be required to ensure the "MAX. ON CENTER" dimension are not exceeded.*
3. *Concrete anchor table:*

ANCHOR TYPE	ANCHOR SIZE	MIN. EMBEDMENT	MIN. CLEARANCE TO MASONRY EDGE	MIN. CLEARANCE TO ADJACENT ANCHOR
ITW TAPCON®	1/4"	1-1/4"	2"	4"
DeWALT ULTRACON+®	1/4"	1-1/4"	1"	4"
ITW TAPCON®	3/16"	1-1/4"	3"	1-1/2"

WOOD SCREW INSTALLATION NOTES:

1. *Maintain a minimum 5/8" edge distance, 1" end distance, & 1" o.c. spacing of wood screws to prevent the splitting of wood.*

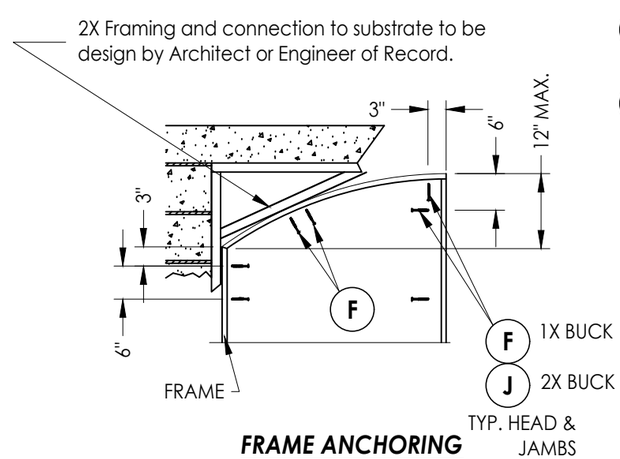

FRAME ANCHORING
Segmented Door

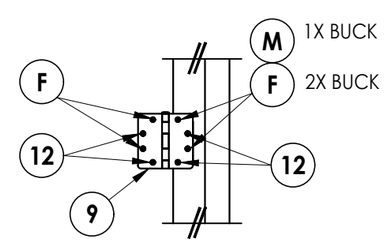

HINGE DETAIL

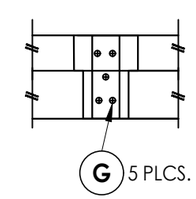

DETAIL 1
Mullion to Jamb

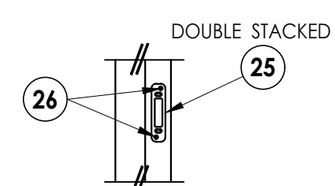

DETAIL 2

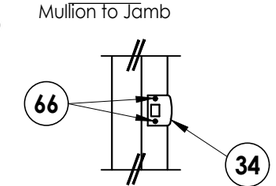

DETAIL 3

Documents Prepared By:
Lyndon F. Schmidt
P.E. No. 43409

RW BUILDING CONSULTANTS, INC.
P.O. Box 230, Valrico, FL 33595
Phone No.: 813.659.9197
FBPE Registry No. 9813

PRODUCT: *DALLAS MILLWORK WOOD DOOR*

PART OR ASSEMBLY: *FRAME ANCHORING*

REVISIONS

NO.	DATE		BY
5	7/2/26	UPDATE TO 9TH ED. (2026) FBC	LFS
4	10/5/23	UPDATE TO 8TH ED. (2023) FBC	LFS
3	8/07/20	UPDATE TO 7TH ED. (2020) FBC	LFS
2	7/10/17	UPDATE TO 6TH ED. (2017) FBC	JK
1	7/2/15	UPDATE TO 5TH ED. (2014) FBC	JK

DATE: 1/29/13
SCALE: N.T.S.
DWG. BY: JK
CHK. BY: LFS
DRAWING NO.: FL-16185.3
SHEET 8 OF 9

© 2013 R.W. BUILDING CONSULTANTS INC.

Z:\2023 FBC Drawings\Dallas Millwork, Inc\FL-16185 R6 NI Wood Doors\FL-16185.3-.4.dwg

BILL OF MATERIALS

ITEM #	DESCRIPTION	MATERIAL
A	1X BUCK G >= 0.42	WOOD
B	2X BUCK G >= 0.42	WOOD
C	1/4" MAX. SHIM SPACE	-
D	1/4" X 2-3/4" PFH DeWALT OR ITW CONCRETE SCREW	STEEL
E	MASONRY - 3,000 PSI MIN. CONCRETE CONFORMING TO ACI 301 OR HOLLOW BLOCK CONFORMING TO ASTM C90	CONCRETE
F	#10 X 2-1/2" PFH WOOD SCREW (1.15" MIN. EMBEDMENT w/ 0.15" C'-SINK)	STEEL
G	#10 X 3" PFH WOOD SCREW	STEEL
H	#10 X 4" PFH WOOD SCREW	STEEL
J	1/4" X 3-3/4" PFH DeWALT OR ITW CONCRETE SCREW	STEEL
K	#10 X 2" PFH WOOD SCREW	STEEL
M	3/16" X 3-1/4" PFH ITW CONCRETE SCREW	STEEL
1	HEAD & JAMB	WOOD
4	MULLION	WOOD
7	WEATHERSTRIP (QLON)	FOAM
8	DOOR SWEEP	PVC
9	4" X 4" HINGE	STEEL
12	#12 X 1" PFH WOOD SCREW	STEEL
17	16 GA. X 1" BRAD NAIL	STEEL
19	ADA THRESHOLD	ALUM
20	INSWING THRESHOLD	ALUM/WOOD
21	OUTSWING THRESHOLD	ALUM/WOOD
22	OUTSWING THRESHOLD	WOOD
23	INSWING THRESHOLD	WOOD
25	TRU-LOCK STRIKE PLATE (Amesbury)	STEEL
26	#8 X 2-1/2" PFH WS	STEEL
33	SIDELITE SPACER	WOOD
34	LATCH STRIKE PLATE	STEEL
40	WOOD DOOR PANEL (GLAZED 3/4 LITE)	WOOD
41	WOOD DOOR PANEL (OPAQUE)	WOOD
50	3/4 LITE WOOD SIDELITE PANEL	WOOD
51	FULL LITE WOOD SIDELITE PANEL	WOOD
66	#8 X 3/4" PFH WOOD SCREW	STEEL

NOTE: WOOD DOOR/SIDELITE PANEL MATERIAL: SAPELE (S.G. >= 0.54)
WOOD JAMB MATERIAL: RADIATA PINE (S.G. >= 0.44)

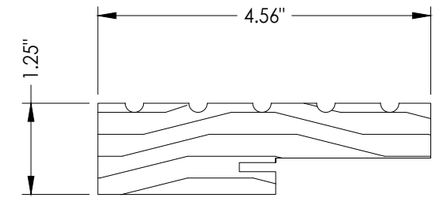

1 HEAD & JAMB

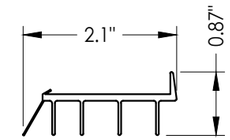

8 DOOR SWEEP

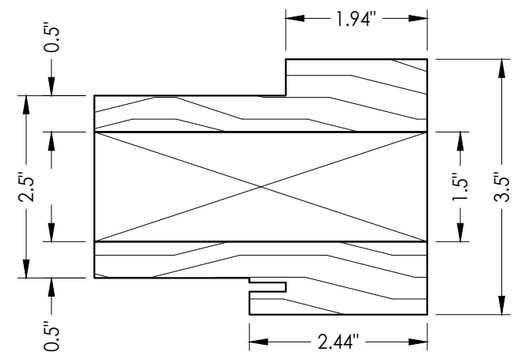

4 MULLION

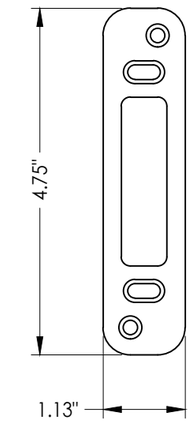

25 TRU-LOCK STRIKE PLATE
Amesbury

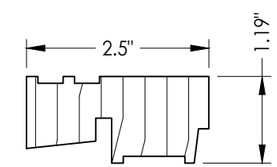

33 SIDELITE SPACER

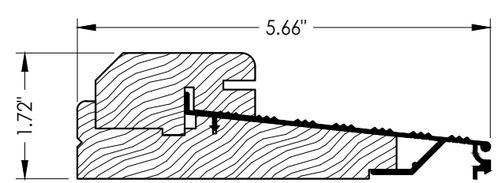

21 OUTSWING THRESHOLD

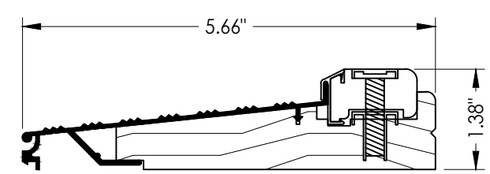

20 INSWING THRESHOLD

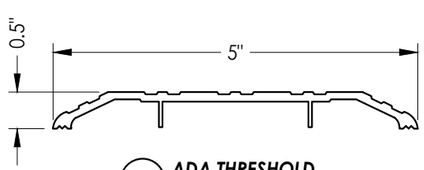

19 ADA THRESHOLD
Single Door only

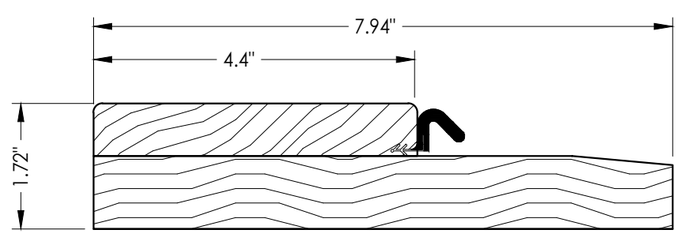

22 OUTSWING THRESHOLD

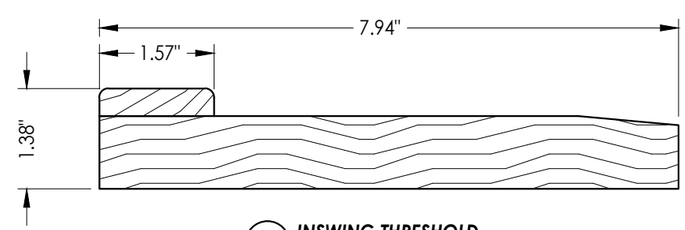

23 INSWING THRESHOLD

Documents Prepared By:
Lyndon F. Schmidt
P.E. No. 43409

R.W. BUILDING CONSULTANTS, INC.
P.O. Box 230, Valrico, FL 33595
Phone No.: 813.659.9197
FBPE Registry No. 9813

PRODUCT: DALLAS MILLWORK WOOD DOOR

PART OR ASSEMBLY: BILL OF MATERIALS & COMPONENTS

REVISIONS

NO.	DATE		BY
5	7/2/26	UPDATE TO 9TH ED. (2026) FBC	LFS
4	10/5/23	UPDATE TO 8TH ED. (2023) FBC	LFS
3	8/07/20	UPDATE TO 7TH ED. (2020) FBC	LFS
2	7/10/17	UPDATE TO 6TH ED. (2017) FBC	JK
1	7/2/15	UPDATE TO 5TH ED. (2014) FBC	JK

DATE: 1/29/13
SCALE: N.T.S.
DWG. BY: JK
CHK. BY: LFS
DRAWING NO.: FL-16185.3
SHEET 9 OF 9

© 2013 R.W. BUILDING CONSULTANTS INC.

Z:\2023 FBC Drawings\Dallas Millwork, Inc\FL-16185 R6 NI Wood Doors\FL-16185.3-.4.dwg